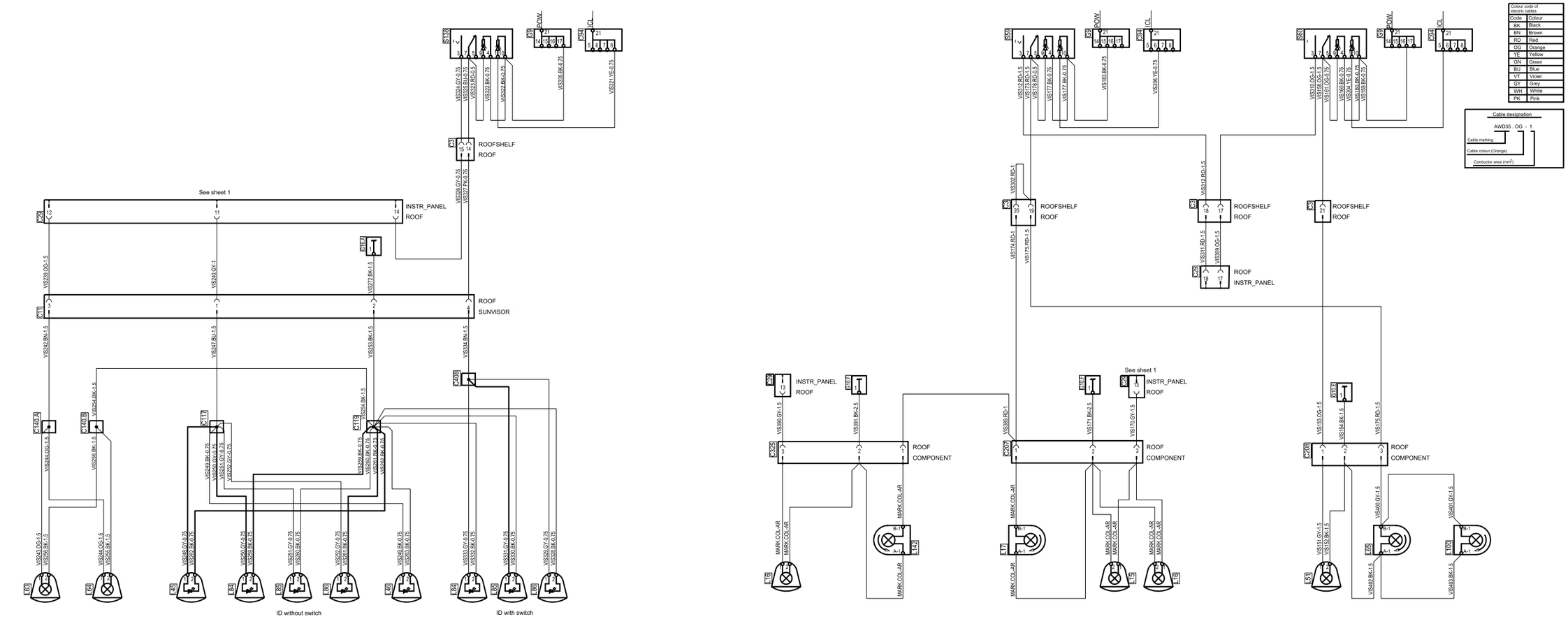

Colour code of electric cables	
Code	Colour
BK	Black
BN	Brown
RD	Red
OG	Orange
YE	Yellow
GN	Green
BU	Blue
VT	Violet
GY	Grey
WH	White
PK	Pink

Cable designation

AW035 . OG - 1

Cable marking

Cable colour (Orange)

Conductor area (mm^2)

Des.	Pos.	Description
C1	C 8	Connector, 66-pole
C3	F 6	Connector, 21-pole
C3	E 3	Connector, 21-pole
C3	E 4	Connector, 21-pole
C3	E 2	Connector, 21-pole
C5	B 6	Connector, 2-pole
C11	E 7	Connector, 5-pole
C29	D 5	Connector 21-pole, Instr-Roof
C29	E 3	Connector 21-pole, Instr-Roof
C29	E 8	Connector 21-pole, Instr-Roof
C29	E 5	Connector 21-pole, Instr-Roof
C29	E 7	Connector 21-pole, Instr-Roof
C34	F 2	Connector, 21-pole
C94	F 3	Connector, 21-pole
C94	F 5	Connector, 21-pole
C100	C 3	Connector, 66-pole
C117	D 7	Splice, sunvisor, VIS
C119	D 7	Splice, sunvisor, VIS
C138	B 6	Splice, bumper, VIS
C140.A	D 8	Splice, sunvisor, VIS
C140.B	D 8	Splice, sunvisor, VIS
C141	B 5	Splice, sunvisor, VIS
C142	B 5	Splice, sunvisor, VIS
C162	B 1	Socket, 15-pole
C168	B 5	Splice, bumper, VIS
C207	D 3	Connector, 5-pole, VIS
C208	D 2	Connector, 5-pole, VIS
C251	A 4	Cut cable, VIS
C254	A 5	Cut cable, VIS
C256	A 4	Cut cable, VIS
C257	A 5	Cut cable, VIS
C325	D 4	Connector, 5-pole
C408	E 6	Splice, sunvisor, VIS
C432	B 2	Socket, 7-pole, 24N
G9	F 2	Joint connector, ground
G9	F 3	Joint connector, ground
G9	F 4	Joint connector, ground
G10.E	E 2	Ground, roof
G10.F	E 4	Ground, roof
G10.F	E 3	Ground, roof
G13.O	B 3	Ground, torpedo wall
G13.Q	B 2	Ground, torpedo wall
G16.A	E 7	Ground, roof
G21.A	B 6	Ground, cab front
G21.A	B 8	Ground, cab front
G21.B	B 8	Ground, cab front
G21.C	B 7	Ground, cab front
G22.A	B 7	Ground, cab front
G22.B	B 7	Ground, cab front
G22.C	C 5	Ground, cab front
L11	A 5	Distance light
L12	A 5	Distance light
L13	A 5	Front fog light, left
L13L145	A 5	Front fog light, left / Daytime runing light, left
L14	A 6	Front fog light, right
L14L146	A 6	Front fog light, right / Daytime running light, right
L15	D 3	Work light
L16	D 5	Work light
L16	D 3	Work light
L17	D 4	Rotating beacon
L45	C 7	End out marker light,
L46	C 6	End out marker light,
L51	D 2	Signlamp
L63	C 8	Distance light
L64	C 8	Distance light
L65	D 2	Rotating beacon
L84	C 6	ID light,
L84	C 7	ID light,
L85	C 6	ID light,
L85	C 7	ID light,
L86	C 6	ID light,
L86	C 7	ID light,
L100	D 2	Rotating beacon
L101	B 3	Rear combination lamp, left
L102	B 3	Rear combination lamp, right
L121	A 8	Category six lamp
L122	A 7	Category six lamp
L138	A 8	DirlPos lamp, front LH
L139	A 7	DirlPos lamp, front RH
L140	A 8	Headlamp, LH
L141	A 7	Headlamp, RH
L142	D 4	Rotating beacon
L145	A 5	Daytime runing light, left
L146	A 6	Daytime runing light, right
M7	A 6	Motor, windscreen washer
M8	A 6	Motor, headlamp washer
M21	A 8	Motor, light level control
M22	A 7	Motor, light level control
N2N17	A 6	Signal horn
S59	F 3	Switch, rotating beacon
S60	F 2	Switch, roof sign lighting
S138	F 6	Switch, ID-lamps

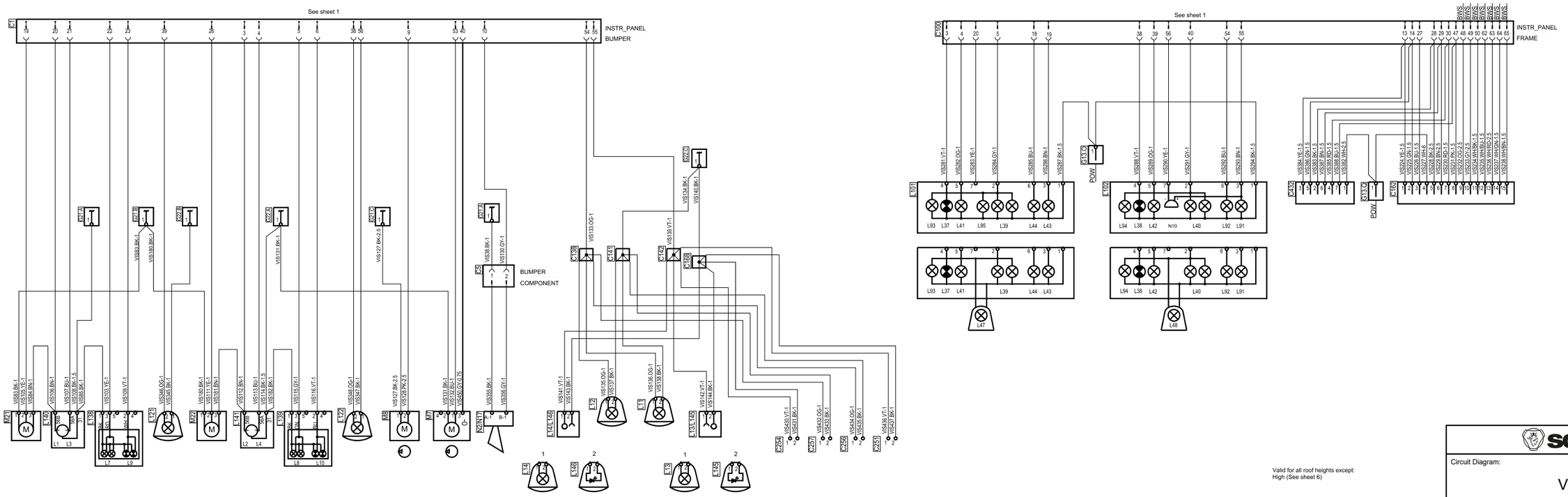

Valid for headlamp type H4.
For Gasdischarge lamp see sheet 3.

1. Front Fog light
2. Daytime running light

Valid for all roof heights except:
High (See sheet 6)

S-order equipment connected:
Cir dgm BOL

STD
4247

SCANIA

Circuit Diagram:

VIS

Drawing No.-
Sheet-Rev: 1428523-2-27

N.B. The copyright and ownership of this drawing including associated computer data are and will remain ours. They must not be copied, used or brought to the attention of any third party without prior permission (C) Scania, Sweden