Cable designation

AWD35 . OG - 1

Cable marking

Cable colour (Orange)

Conductor area (mm²)

Colour code of electric cables	
Code	Colour
BK	Black
BN	Brown
RD	Red
OG	Orange
YE	Yellow
GN	Green
BU	Blue
VT	Violet
GY	Grey
WH	White
PK	Pink

Des.	Pos.	Description
C9	A 5	Connector, 15-pole
C14	A 5	Connector, 15-pole
C19	A 4	Connector, 21-pole, Instr-Roof
E33	C 3	Control unit, FM-Radio
E58	B 4	Mute-function

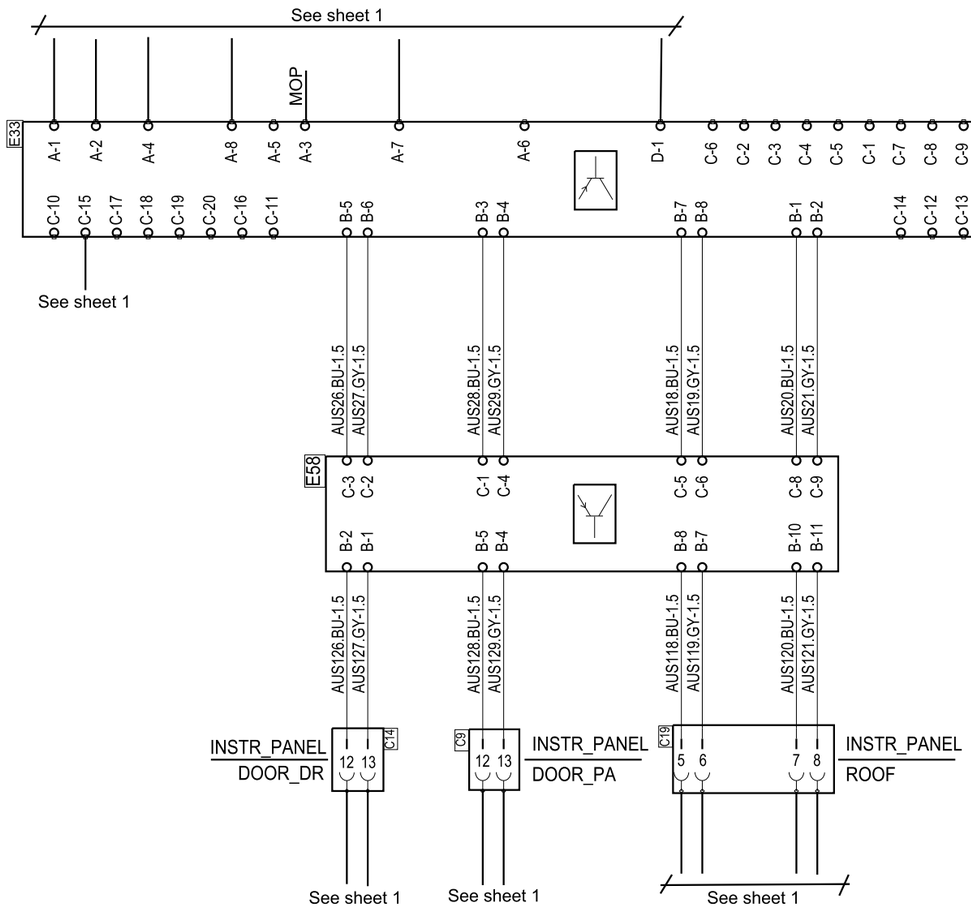

LHD with mutebox I 600 and I 300
For FMS prep cable, See sheet 5

STD
4247

SCANIA

Circuit Diagram:

AUS

Drawing No.-
Sheet-Rev: 1441310-3-6

N.B. The copyright and ownership of this drawing including associated computer data are and will remain ours. They must not be copied, used or brought to the attention of any third party without prior permission (C) Scania, Sweden